English
Chinese

Travel Sax

User Manual

Please read this manual carefully before operating your set and retain it for future reference.

odiseimusic

www.odiseimusic.com

SPECIAL MESSAGE SECTION

This product utilizes rechargeable batteries. DO NOT connect this product to any power supply or adapter different than one described in the manual or specifically recommended by OdiseiMusic.
This product should be used only with the components supplied or in case is used a non-official accessory, please observe that the specifications are the same as the official ones.

IMPORTANT: Don't try to open or disassembly the Travel Sax. For any technical problem it may have, please contact Odisei Music for further information.

SPECIFICATIONS SUBJECT TO CHANGE:

The information contained in this manual is believed to be correct at the time of printing. However, Odisei Music reserves the right to change or modify any of the specifications without notice or obligation to update existing units.

This product, with an amplifier and headphones or speaker/s, may be capable of producing sound levels that could cause permanent hearing loss. DO NOT operate for long periods of time at a high-volume level or at a level that is uncomfortable. If you experience any hearing loss or ringing in the ears, you should consult an audiologist.

IMPORTANT: The louder the sound, the shorter the time period before damage occurs.

ENVIRONMENTAL ISSUES:

Odisei Music strives to produce products that are both user safe and environmentally friendly. We sincerely believe that our products and the production methods used to produce them, meet these goals. In keeping with both the letter and the spirit of the law, we want you to be aware of the following:

Battery Notice

This product contains a small LiPo Type Battery.

Disposal Notice

Should this product become damaged beyond repair, or for some reason its useful life is considered to be at an end, please observe all local, state, and federal regulations that relate to the disposal of products that contain lead, batteries, plastics, etc. If your dealer is unable to assist you, please contact Odisei Music directly.

SERIAL NUMBER LOCATION:

The serial number is located on the instrument body, below the low keys.

PRECAUTIONS

PLEASE READ CAREFULLY BEFORE PROCEEDING

* Please keep these precautions in a safe place for future reference.

⚠ *WARNING*

Always follow the basic precautions listed below to avoid the possibility of serious injury or even death from electrical shock, short-circuiting, damages, fire or other hazards. These precautions include, but are not limited to, the following:

- Do not open the instrument or attempt to disassemble the internal parts or modify them in any way. The instrument contains no user-serviceable parts. If it should appear to be malfunctioning, discontinue use immediately and have it inspected by qualified Odisei Music service personnel.

- Do not expose the instrument to rain, use it near water or in damp or wet cond tions, or place containers on it containing liquids which might spill into any openings.

- Use the specified adaptor recommended by Odisei Music only (or another one with same specifications). Using the wrong adaptor can result in damage to the instrument or overheating.

- Before cleaning the instrument, always remove the electric plug from the outlet. Never insert or remove an electric plug with wet hands.

- Check the electric plug periodically and remove any dirt or dust which may have accumulated on it.

- Keep this product always out of reach of children. It is not a toy.

⚠ *CAUTION*

Always follow the basic precautions listed below to avoid the possibility of physical injury to you or others, or damage to the instrument or other property. These precautions include, but are not limited to, the following:

- Do not place the product and the cable charger near heat sources such as heaters or radiators, and do not excessively bend or otherwise damage the cord, place heavy objects on it, or place it in a position where anyone could walk on, trip over, or roll anything over it.

- When removing the cable charger from the instrument or an outlet, always hold the plug itself and not the cord.

- Do not expose the instrument to excessive dust or vibrations, or extreme cold orheat (such as in direct sunlight, near a heater, or in a car during the day) to prevent the possibility of damage to the internal components.

- Do not place the instrument in an unstable position where it might accidentally fall over.

- Before moving the instrument, remove all connected adaptor and other cables.

- When cleaning the instrument, use the Odisei Music cloth included or a soft and dry cloth. Do not use paint thinners, solvents, cleaning fluids, or chemical-impregnated wiping cloths. Also, do not place vinyl or plastic objects on the instrument, since this might discolor the keyboard.

- Do not rest your weight on, or place heavy objects on the instrument, and do not use excessive force on the buttons, switches or connectors.

- Do not operate the instrument for a long period of time at a high or uncomfortable volume level, since this can cause permanent hearing loss. If you experience any hearing loss or ringing in the ears, consult a physician.

- Always turn the power off when the instrument is not in use.

- The Travel Sax should not be exposed to water (dripping or splashing) and no objects filled with liquids, such as vases, should be placed on the apparatus.

- Do not use the Travel Sax and the in conditions with extremely low air pressure.

Odisei Music cannot be held responsible for damage caused by improper use or modifications to the instrument, or data that is lost or destroyed.

ENG
CN

Contents

8 Features

10 Packing List

11 Get Started

14 Maintenance

15 Troubleshooting

16 Dimensions

17 Specifications

18 Contact Us

19 Terms of Warranty

TRAVEL SAX

This User Manual is intended to give you a brief overview and the necessary information of the Travel Sax – the smallest and lightest electronic saxophone in the world!
The Travel Sax takes wind MIDI control to new levels of performance and playability.
This small MIDI controller works with your smartphone and your PC.
It uses a standard saxophone mouthpiece and the position of the keys as well as the pressure needed to play them mimic a conventional saxophone.
From now on you will be able to practice anytime anywhere without disturbing other enabling to improve your saxophone skills much faster.
You will also have access to our Travel Sax app for free, available on Apple Store and Google Store.
With the app you will be able to practice and learn in a faster and easier way.

Features

Travel Sax is the smallest and lightest electronic saxophone in the world! What does it make the best electronic saxophone in the market?

DESIGN

Realistic electronic saxophone with incredibly playability and expressive control.
It has 22 keys and all of them have been designed to emulate the position and the pressure of a standard saxophone to fill as comfortable as possible when playing it.

CONECTIVITY

You can connect your Travel Sax to a computer or a smartphone using Bluetooth or USB connection. Playing quietly is also possible if you connect your headsets to the Smartphone or PC.

TRAVEL SAX APP

The Travel Sax app will allow you to play different saxophone sounds by simply swiping from one to another. You will also be able to play with different sound effects such as: Reverb, Delay, Key sounds, Humanisation among others.

MOUTHPIECE ADAPTOR

Travel Sax has been designed to be used with a Standard Alto mouthpice but it includes 3 different adaptors so you can also play it using your own Soprano, Tenor or even Baritone saxophone mouthpiece.

EXPRESSIVENESS

The High-resolution wind sensor achieves precise breath response for smooth, natural velocity/volume control.

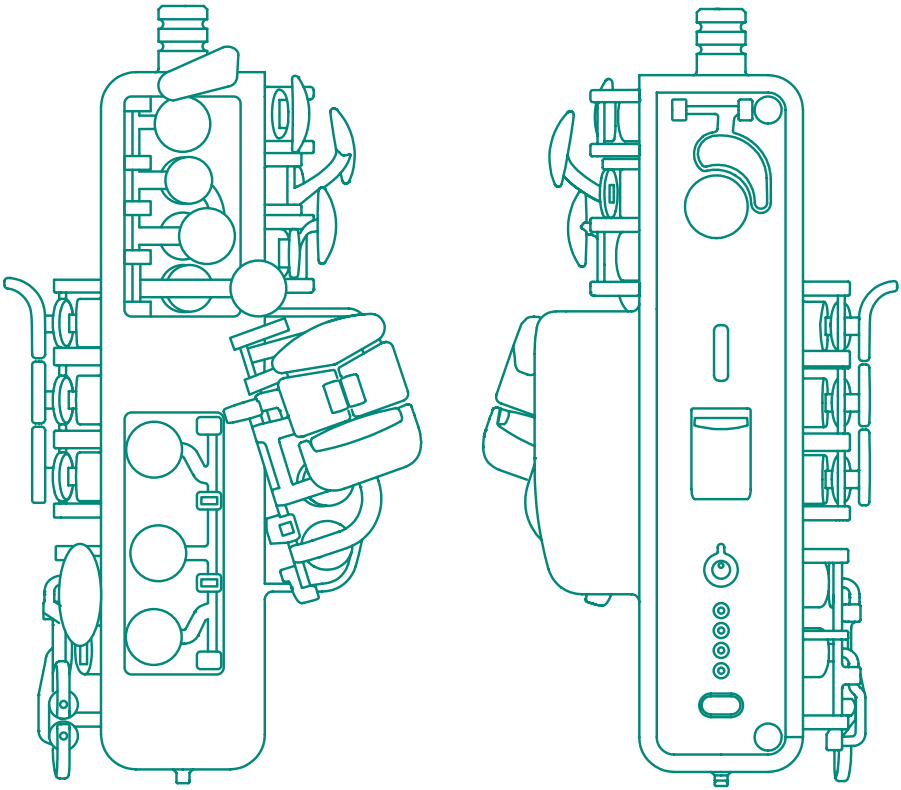

Packing List

Once you open the Travel Sax packaging, make sure that it includes all of the items listed below.

Travel Sax case
A rigid case to give full protection to your Travel Sax and keep safe all of your accessories.

Travel Sax
A fully functional and playable electronic saxophone to play anywhere anytime.

Alto mouthpiece
An Odisei Music alto mouthpiece with the reed included. This regular mouthpiece can be used without any adaptor.

x3 Mouthpiece adaptors
Three mouthpiece adaptors for every different saxophone mouthpiece (Baritone, Tenor and Soprano).

USB-C cable
Don't let your Travel Sax run out of battery with your charger. This USB-C cable will let you play your saxophone with no latency by plugging it directly to your smartphone.

Microfiber cloth
Remember to always keep your Travel Sax clean by removing the dust and saliva after and before you play.

Drawstring bag
Keep safe all the accessories in this velvet drawstring bag.

Get Started

Here you can find a quick review of how to get started with your Travel Sax and learn how to set it up.
You can find all the getting started videos on our webpage: **www.odiseimusic.com/get-started** or by scanning each QR code with your smartphone.

1. Travel Sax app

Download for free the Travel Sax app from the Apple Store or Google Play.

GET IT ON Google Play

Download on the App Store

2. Taking your Travel Sax

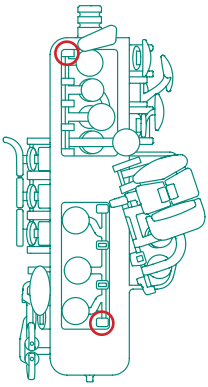

To pull out your Travel Sax from the case, grab it carefully by the key pillars indicated in the picture.

3. Power ON/OFF

Turn on your Travel Sax by pressing one time the power button. For turning it off, double press the button.

Single PRESS - Turn On

Double PRESS - Turn Off

4. Bluetooth connection

Travel Sax **Bluetooth** is always ON. To connect it with the app, press the Bluetooth icon on the main page and then find "**Travel Sax**" to press and link both devices.

5. Mouthpiece position

Slide down a little bit the reed of your mouthpiece for a better playability of the Travel Sax and avoid blowing noises. To facilitate the placement, we recommend adding some lubricant or oil in the O-rings of the Travel Sax for a smooth connection.

6. Mouthpiece adaptor (optional)

Adjust your mouthpiece to its adaptor in case you don't use an Alto mouthpiece.
Plug it in your Travel Sax by rotating it until you hear a click.
Mount your mouthpiece on by rotating on it.

7. Use of the Travel Sax App

On the main page of the app swipe left or right to choose the saxophone you want to play. You can use some effects to make your playability more real!

8. ¿How to charge your Travel Sax?

To charge your Travel Sax, connect it with your USB-C cable to the connection below the power button.
Make sure that the LED lights blink to know that it is charging.

Maintenance

We have designed the Travel Sax to be durable and easy to use, but regular cleaning and mantainance will ensure that it stays in good condition. It will also give you the best possible experience while playing it.

- After playing, take off the mouthpiece and blow the Travel Sax without it to remove all the saliva that hasn't been removed from the inside.
- When not in use, keep the mouthpiece and the reed dry and clean. For a better cleaning use some water and a cloth for drying.
- Make sure that both adaptor and Travel Sax connection are completely clean after you play.
- For a better hygiene always clean the saliva in the inner side of the blowing tube of the Travel Sax by trying to use a cleaning cloth. Also remember to clean the bottom of the Travel Sax, where the saliva comes out.
- Use the Odisei Music microfiber cloth to remove the dust carefully from the Travel Sax.

You can find the video in the following link of our webpage or by scanning the QR code with your smartphone: **www.odiseimusic.com/get-started**

Troubleshooting

Problem	Cause & Correction
No power	• The Travel Sax ran out of battery. • Plug in the power cable. • Check whether electricity failed. • Check the condition by operating other electronic devices.
No sound	• The Travel Sax is not connected to the device. Plug in the USB cable to a device or connect it via **Bluetooth** through the app. • The unit or your smart device's volume is set to minimum. Check and adjust the volume of the speaker or your device's volume.
Bluetooth pairing does not work well	• Switch **Bluetooth** off and on again on your **Bluetooth** device, then try pairing again. • Be sure your **Bluetooth** device is on. • Remove the obstacle in the path of the **Bluetooth** device and the unit. • Make sure the distance between both devices is less than 6m.
The app doesn't work properly	• Does an error occur when accessing the app? • Make sure that your smart device is compatible with the app. • Make sure that the application is the latest version.
The sound has delay	• Make sure that you are not using two Bluetooth connections at the same time (ex. Travel Sax to phone device and also phone device to Bluetooth headphones). • Two simultaneous connections, will increase the latency in your Bluetooth, so the sound will have a huge delay. • We recommend to only use one Bluetooth connection for a better experience.

Dimensions

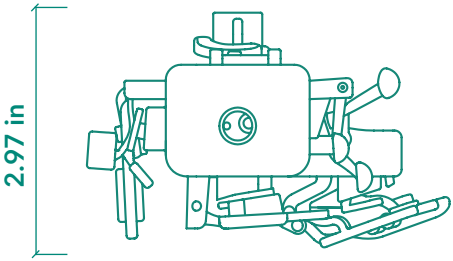

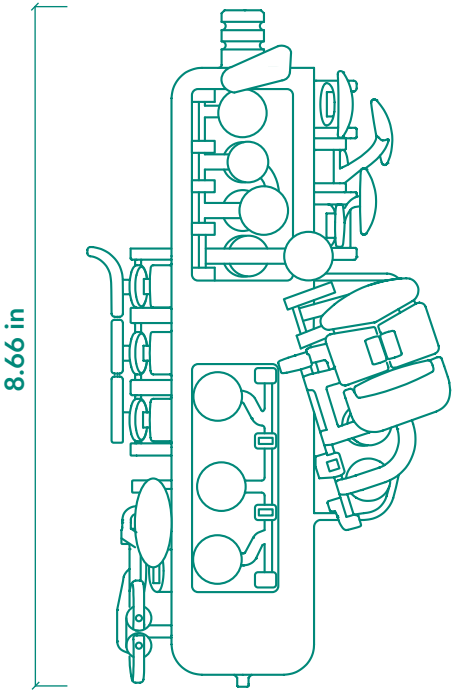

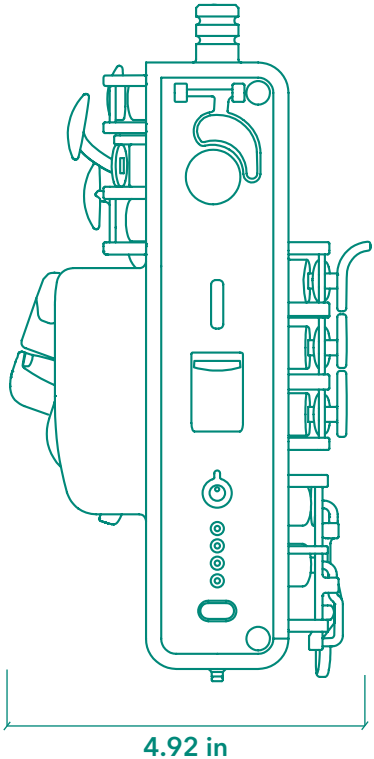

Specifications

Dimensions
8.66 x 4.92 x 2.97 in (22 x 12.5 x 8.5 cm)

Weight
7.4 oz (225 g.)

Power Consumption
5V (USB Type C)

Operating temperature
10 °C to 36 °C

Operating humidity
20% to 80%

Material composition
PA12 (polyamide)

Bluetooth Module
2.4GHZ Bluetooth transceiver
TX Max Power: 4 dBm

Lithium Battery
800mAH Li-Po Battery
Input Voltage: 5V (USB Type C)

Hereby, **Odisei Music** declares that the radio equipment type Travel Sax is in compliance with Directive 2014/53/EU (and other applicable ones). The full text of the EU declaration of conformity is available at the following internet address:

Contact Us

BASIC INFORMATION

1. Brand

odiseimusic

2. Model
Travel Sax TS-V1

3. Date of manual publication:
02 June 2019

For details or questions regarding the product use, technical troubleshooting or warranty please contact us:

ODISEI MUSIC S.L
Cami de Can Ametller, 20, Sant Cugat del Vallés, 08195, Spain
Tel: +34 649 108 959

info@odiseimusic.com
www.odiseimusic.com

Terms of warranty

REFUND POLICY
The consumer has a total of 14 days from the acquisition of the Travel Sax to be able to return the product thus receiving a full refund of the price of the it. The product must be in the same state and with the all the original content in order to receive a full refund.
Shipping costs will be paid by the customer.

WARRANTY
OdiseiMusic warrants the included hardware product and accessories against defects in materials and workmanship for two years from the date of original purchase. Unless proven otherwise, it will be presumed that the breaches of conformity manifested in a period of six months from the delivery of the good already existed on that date.

The warranty will not cover the repairing costs of the following cases:

- Misuse of Travel Sax, whether subject to extreme conditions, as using it incorrectly.
- Improper handling of the product.
- Normal wear and tear, nor damage caused by accident or abuse.
- Malfunction due to the use of accessories not authorized by OdiseiMusic.

CONTACT INFORMATION
The contact information is provided below in case of requesting a return or replacement as long as it is covered by the warranty.

Manufacturer: Odisei Music S.L
Contact Mail: info@odiseimusic.com
Shipping Address: Cami de Can Ametller, 20, Sant Cugat del Valles, 08195, Spain
Contact Number: +34 649 108 959

Travel Sax
用戶手冊

在操作設備之前, 請仔細閱讀本手冊, 並妥善保存以備將來參考。

odiseimusic

www.odiseimusic.com

特殊信息部分

本產品使用可充電電池。　　請勿將本產品連接到不同於手冊中所述或OdiseiMusic特別推薦的任何電源或適配器。
本產品只能與提供的組件一起使用，或使用非官方附件時，請注意其規格與官方規格相同。
重要： 請勿嘗試打開或拆卸旅行薩克斯管。 如有任何技術問題，請聯繫

規格可能會發生變化：

本手冊中包含的信息在印刷時被認為是正確的。 但是，Odisei Music保留更改或修改任何規範的權利，恕不另行通知，也沒有義務更新現有單元。

帶有放大器和耳機或揚聲器的本產品可能會產生可能導致永久性聽力損失的聲音。 請勿長時間在高音量或令人不舒服的音量下操作。 如果您有聽力損失或耳鳴，請諮詢聽力專家。

環境問題：

Odisei Music致力於生產既安全又環保的產品。 我們真誠地相信我們的產品以及用於生產它們的生產方法能達到這些目標。 為了與法律文字和精神保持一致，我們希望您注意以下幾點：

電池注意事項

該產品包含一個小型的LiPo型電池。

處置通知

如果該產品損壞無法修復，或由於某種原因被認為使用壽命已盡，請遵守與處置含鉛，電池，塑料等產品有關的所有當地，州和聯邦法規。 如

序列號位置：

序列號位於儀器主體上的低鍵下方。

注意事項

在進行操作之前，請仔細閱讀

⚠ 警告!

始終遵循以下基本注意事項，以避免由於電擊，短路，損壞，火災或其他危險而造成嚴重傷害甚至

•請勿打開儀器或嘗試拆卸內部零件或以任何方式修改它們。 儀器不包含用戶可維修的零件。 如果它似乎出現故障，請立即停止使用，並請合格的Odisei音樂服務人員對其進行檢。

•請勿將本樂器淋雨，在水附近或潮濕環境中使用，或在其上放置盛有可能溢出任何開口的液體的容器。

•僅使用Odisei Music推薦的指定適配器（或其他具有相同規格的適配器）。 使用錯誤的適配器會導致儀器損壞或過熱。

•清潔儀器之前，請務必從插座上拔下電源插頭。 切勿用濕手插拔電源插頭。

•定期檢查電源插頭，並清除其上積聚的灰塵。
•請將本產品始終放在兒童接觸不到的地方。 它不是玩具。

⚠ 警告!

始終遵循以下基本預防措施, 以免對您或他人造成人身傷害或損壞儀器或其他財產。這些預防措施包括但不限於以下各項:

•請勿將產品和電纜充電器放置在加熱器或散熱器之類的熱源附近，也不要過度彎曲或以其他方式損壞電源線，在其上放置重物或將其放置在任何人都可以踏，絆倒的位置。 ，或將任何內容翻滾。

•從樂器或插座上拔下電纜充電器時，請務必握住插頭本身而不是電線。

•請勿將儀器暴露於過多的灰塵或振動，極端寒冷或高溫的環境中（例如，在直射的陽光下，加熱器附近或白天在汽車中），以免損壞內部組件。

•請勿將儀器放置在不穩定的地方，以免其意外跌落。

•移動儀器之前，請拔下所有連接的適配器和其他電纜。

•清潔樂器時，請使用隨附的OdiseiMusic音樂布或柔軟的干布。請勿使用油漆稀釋劑，溶劑，清潔液或化學浸漬的抹布。另外，請勿在樂器上放置乙烯基或塑料物品，因為這可能會使鍵盤褪色。

•請勿將重物壓在本樂器上或在其上放置重物，也不要在按鈕，開關或連接器上用力過大。

•請勿長時間以高音量或不舒適的音量操作樂器，因為這可能會導致永久性聽力損失。如果您有聽力損失或耳鳴，請諮詢醫生。

•不用儀器時，請務必關閉電源。

•旅行薩克斯請勿暴露於水（滴落或飛濺），並且請勿在花瓶上放置裝有液體的物體，例如花瓶。

•請勿在空氣壓力極低的條件下使用旅行薩克斯管。

OdiseiMusic對因不正確使用或修改本樂器造成的損壞，數據丟失或破壞概不負責。

篇目

28 功能
30 产品列表
31 开始使用
34 保养
35 故障排除指南
36 尺寸图
37 技术指标
38 联系我们
39 保固条款

TRAVEL SAX

本用户手册旨在为您简要概述Travel Sax –世界上最小，最轻的电子萨克斯管！
Travel Sax将风MIDI控制提升到新的性能和可玩性水平。
这个小型MIDI控制器可与您的智能手机和PC配合使用。
它使用标准的萨克斯风笛，按键的位置以及弹奏它们所需的压力模仿传统的萨克斯风。
从现在开始，您将可以随时随地练习，而不会干扰其他功能，从而可以更快地提高萨克斯风的技巧。
您还可以免费访问我们的Travel Sax应用程序，该应用程序可在Apple Store和Google Store上使用。
使用该应用程序，您将能够以更快，更轻松的方式进行练习和学习。

功能

Travel Sax是世界上最小，最轻的电子萨克斯管！ 它使市场上最好的电子萨克斯管是什么？

图案

逼真的电子萨克斯管具有令人难以置信的可演奏性和表现力控制。它有22个琴键，所有这些琴键都旨在模仿标准萨克斯管的位置和压力，从而在演奏时尽可能舒适地填充。

连通性

您可以使用蓝牙或USB连接将Travel Sax连接到计算机或智能手机。如果将耳机连接到智能手机或PC，则也可以进行安静播放。

TRAVEL SAX 应用程式

Travel Sax应用程序将使您可以轻松地从一个萨克斯风滑动到另一个萨克斯风，从而播放不同的萨克斯风。 您还可以播放不同的音效，例如：混响，延迟，按键音，人性化等。

肌肉适配器

Travel Sax被设计为与标准Alto吹嘴一起使用，但是它包含3种不同的适配器，因此您也可以使用自己的女高音，Tenor甚至男中音萨克斯吹嘴来演奏它。

表达力

高分辨率风传感器可实现精确的呼吸响应，从而实现平稳自然的速度/音量控制。

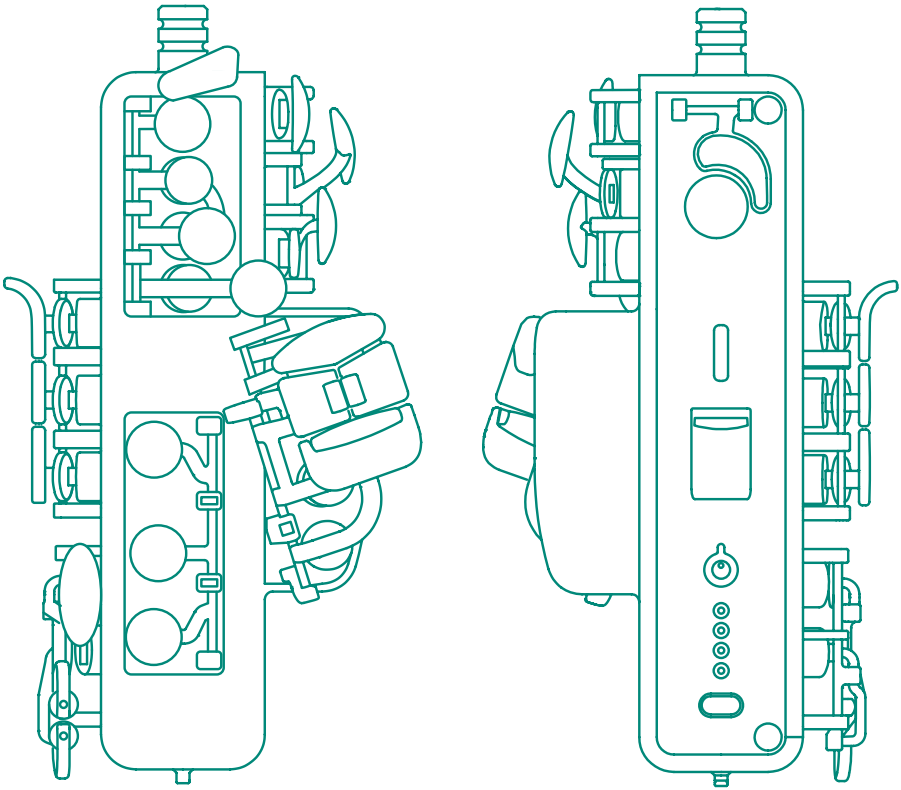

产品列表

打开旅行萨克斯包装后，请确保其中包括下面列出的所有物品。

Travel Sax 保护套

坚固的表壳可为您的旅行萨克斯提供全面保护，并确保所有配件的安全。

Travel Sax

功能齐全且可播放的电子萨克斯管，可随时随地播放。

中音号嘴

带有芦苇的Odisei音乐中音号嘴。 无需任何适配器即可使用该常规吹口。

x3 吹口适配器

三个吹嘴适配器，适用于每个不同的萨克斯风嘴（Baritone，Tenor，Soprano）。

USB-C 电缆

不要让您的旅行萨克斯电池用完了电池。 通过此USB-C电缆将萨克斯管直接插入智能手机，可以毫无延迟地播放它。

超细纤维布

请记住，在玩耍前后，请务必清除灰尘和唾液，以保持旅行萨克斯清洁。

抽绳袋

在此天鹅绒束带袋中妥善保管所有配件。

开始使用

在这里，您可以快速了解如何开始使用Travel Sax，并学习如何进行设置。
您可以在我们的网站上找到所有入门视频
www.odiseimusic.com/get-started或通过使用智能手机扫描每个QR码。

1. Travel Sax 保护套

从Apple Store或Google Play免费下载Travel Sax应用程序。

GET IT ON Google Play

Download on the App Store

2. 拿萨克斯管

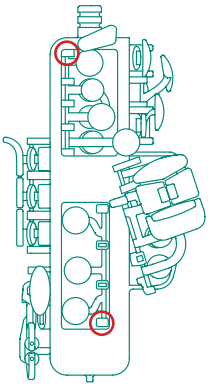

要从旅行箱中拉出旅行萨克斯，请小心抓住图中所示的关键支柱。

3. 电源开/关

按下电源按钮一次即可打开Travel Sax。 要关闭它，请双击按钮。

单按 - 打开

双按 - 关闭

4. 蓝牙连接

Travel Sax蓝牙始终处于打开状态。 要将其与应用程序连接，请按主页上的Bluetooth图标，然后找到“ Travel Sax”以按和链接两个设备。

5. 喉舌位置

向下滑动烟嘴的簧片，以提高旅行萨克斯的可演奏性，并避免吹出噪音。 为了方便放置，我们建议在旅行萨克斯管的O形圈中添加一些润滑剂或油，以实现平稳连接。

6. 吹口适配器（可选）

如果您不使用Alto吹嘴，请将吹嘴调整到其适配器。
通过旋转将其插入旅行萨克斯，直到听到喀哒声为止。
通过旋转将其安装在烟嘴上。

7. 使用Travel Sax App

在应用程序的主页上，向左或向右滑动以选择要播放的萨克斯管。 您可以使用一些效果使您的可玩性更加真实！

8. 如何为萨克斯管充电？

要为Travel Sax充电，请使用USB-C电缆将其连接至电源按钮下方的连接。
确保LED灯闪烁以知道正在充电。

保养

我们设计的旅行萨克斯经久耐用且易于使用，但是定期清洁和保养将确保它保持良好状态。 它还将在播放时为您提供最佳的体验。

- 演奏完毕后，取下吹嘴，吹掉没有它的Travel Sax，以清除所有尚未从内部除去的唾液。
- 不使用时，请保持烟嘴和簧片干燥清洁。 为了更好地清洁，请使用一些水和一块布进行干燥。
- 播放后，请确保适配器和Travel Sax连接都完全干净。
- 为了获得更好的卫生效果，请始终尝试使用清洁布来清洁旅行萨克斯吹管内侧的唾液。 还请记住清洁唾液流出的旅行萨克斯管的底部。
- 使用Odisei音乐超细纤维布小心地除去旅行萨克斯管上的灰尘。

您可以在我们网站的以下链接中找到视频，也可以通过使用智能手机扫描QR码：**www.odiseimusic.com/get-started**

故障排除指南

问题	原因与纠正
没电	• Travel Sax电量耗尽。 • 插入电源线。 • 检查是否断电。 • 通过操作其他电子设备来检查条件。
没有声音	• Travel Sax未连接到设备。 将USB电缆插入设备或通过蓝牙通过应用程序将其连接。 • 本机或智能设备的音量设置为最小。 检查并调整扬声器的音量或设备的音量。
蓝牙配对无法正常工作	• 关闭蓝牙，然后在蓝牙设备上重新打开，然后再次尝试配对。 • 确保您的蓝牙设备已打开。 • 清除蓝牙设备和本机路径上的障碍物。 • 确保两个设备之间的距离小于6m。
该应用无法正常运行	• 访问应用程序时是否发生错误？ • 确保您的智能设备与该应用程序兼容。 • 确保该应用程序是最新版本。
声音有延迟	• 确保您不同时使用两个蓝牙连接（例如，将Sax传送到电话设备，还将电话设备传送到Bluetooth耳机）。 • 同时进行两个连接会增加蓝牙的延迟，因此声音会有很大的延迟。 • 我们建议仅使用一个蓝牙连接以获得更好的体验。

尺寸图

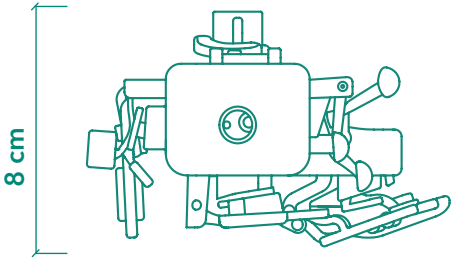

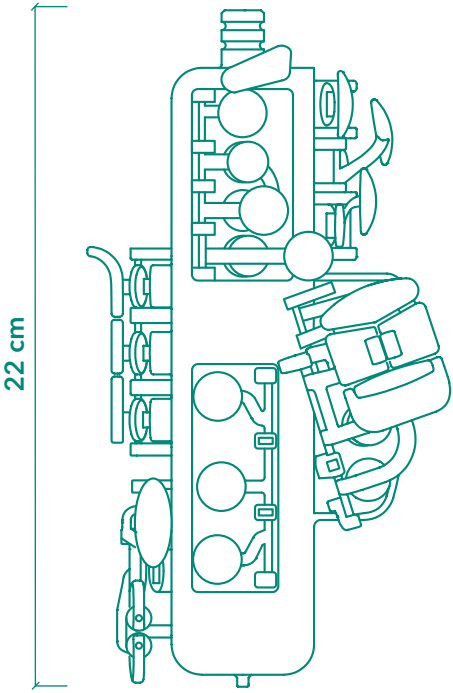

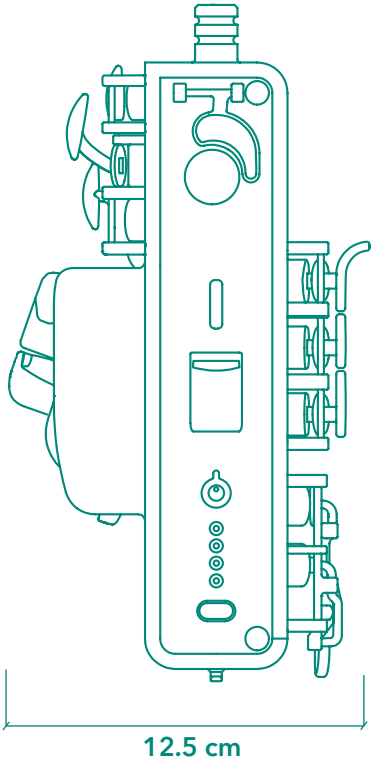

技术指标

尺寸图
22 x 12.5 x 8.5 cm (8.66 x 4.92 x 2.97 in)

重量
225 g. (7.4 oz)

能量消耗
5V (USB Type C)

工作温度范围
10 ºC to 36 ºC

工作湿度范围
20% to 80%

材料组成
PA12 (聚酰胺纤维)

蓝牙模块
2.4GHZ 蓝牙收发器
TX 最大功率: 4 dBm

锂电池
800mAH Li-Po Battery
输入电压: 5V (USB Type C)

Odisei Music特此声明，Travel Sax无线电设备类型符合指令2014/53 / EU（和其他适用的规范）。 欧盟符合性声明的全文可在以下互联网地址获得：

联系我们

基本信息

1. 牌

odiseimusic

2. Model
Travel Sax TS-V1

3. Date of manual publication:
2019年6月2日

有关产品使用，技术故障排除或保修的详细信息或问题，请与我们联系：

ODISEI MUSIC S.L
Cami de Can Ametller, 20, Sant Cugat del Vallés, 08195, Spain
联系电话: +34 649 108 959

info@odiseimusic.com
www.odiseimusic.com

保固条款

退款政策
消费者自购买旅行萨克斯以来总共有14天的时间能够退货，因此可以全额退还其价格。 产品必须处于相同状态且具有所有原始内容，才能获得全额退款。
运输费用将由客户支付。

保证
OdiseiMusic保证自购买之日起两年内提供的硬件产品和配件不存在材料和工艺上的缺陷。 除非另有证明，否则将假定在该日期已存在的自货物交付之日起六个月内发现的违规行为。

保修不包括以下情况的维修费用：

-滥用旅行萨克斯，无论是否处于极端条件下，都应正确使用。
-产品处理不当。
-正常磨损，也不因意外或滥用而造成损坏。
-由于使用了未经Odisei Music授权的配件而导致的故障。

联系信息
如果要求退货或更换，则在下面提供联系信息，前提是保修范围内。

制造商: Odisei Music S.L
联系邮件: info@odiseimusic.com
送货地址: Cami de Can Ametller, 20, Sant Cugat del Valles, 08195, Spain
联系电话: +34 649 108 959

odiseimusic®

© 2019 Odisei Music S.L. All rights reserved. Travel Sax and the Odisei Music logo are registered trademarks of Odisei Music in the UE and registered in other many countries. Travel Sax is a trademark of Odisei Music. The Bluetooth® word mark and logos are owned by the Bluetooth SIG, Inc. and any use of such marks by Odisei Music are under license. Design and specifications subject to change without notice. The Travel Sax may not be authorised for use in some countries.